Burgerhout®
an M&G company

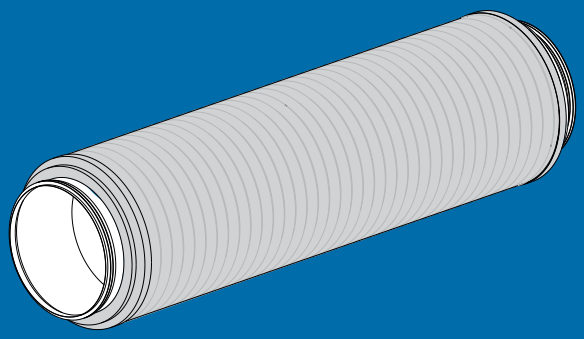

BURGERHOUT EASYAIR SILENCER

INSTALLATION INSTRUCTION

1 EasyAir Silencer - Delivery

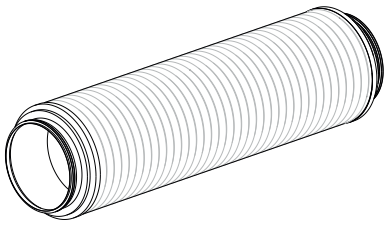

EasyAir Silencer Ø250 mm



Mounting Bracket Ø250 mm
(optional)

GENERAL

The Burgerhout EasyAir Silencer is a plug-and-play duct component. Correct installation is essential for optimal performance in terms of sound reduction, airflow and durability.

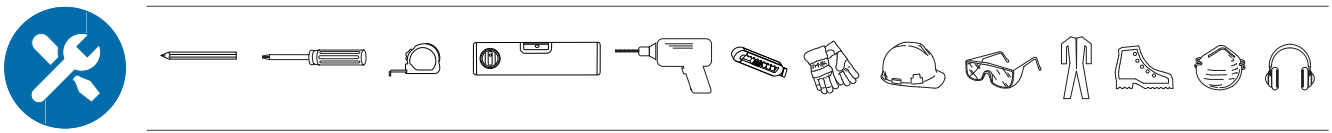

2 Installation requirements

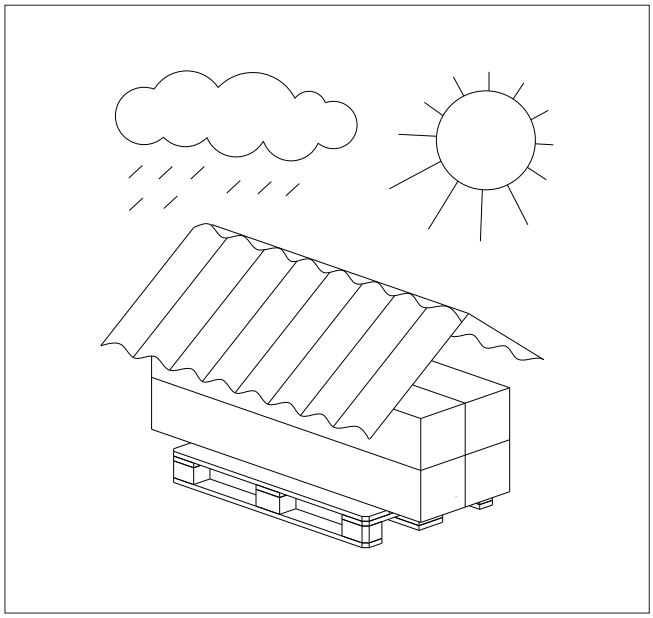

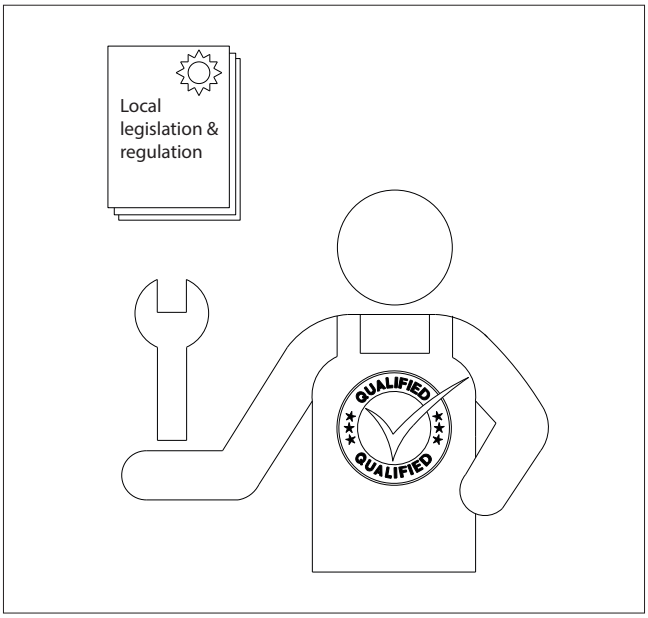

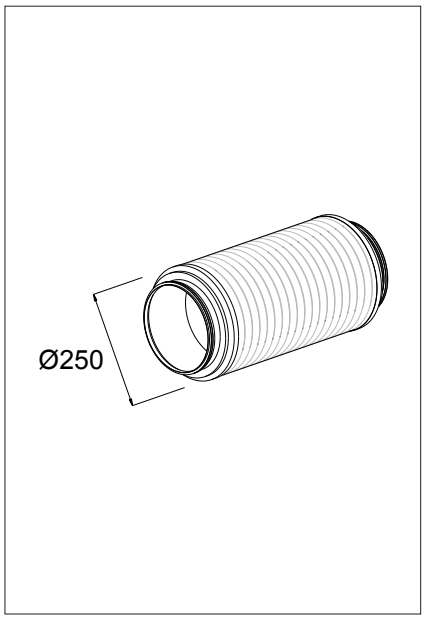



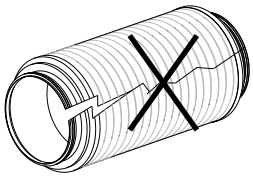

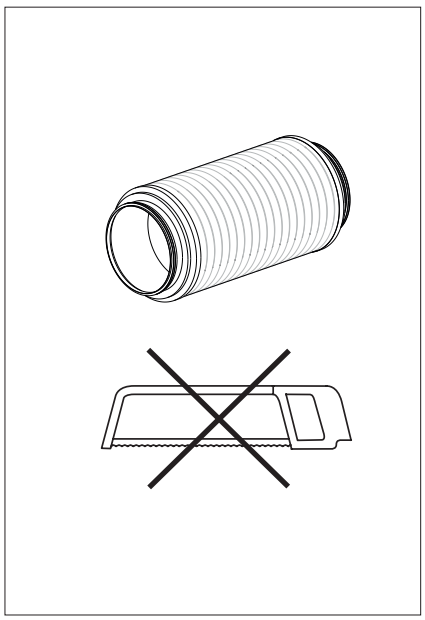

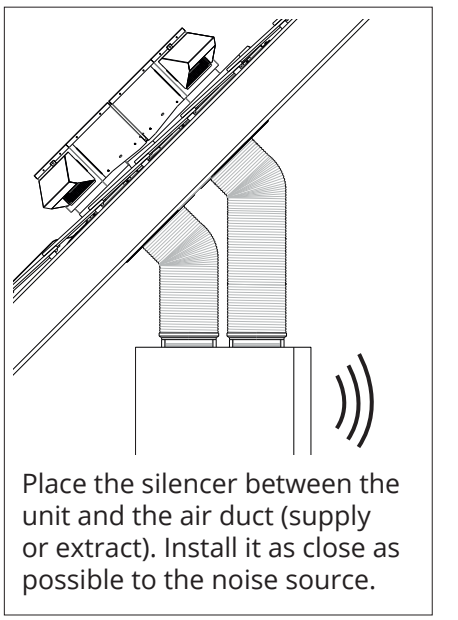

Place the silencer between the unit and the air duct (supply or extract). Install it as close as possible to the noise source.

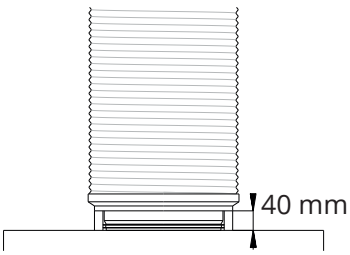

Ensure a minimum overlap of 40 mm and press firmly to achieve a proper seal.

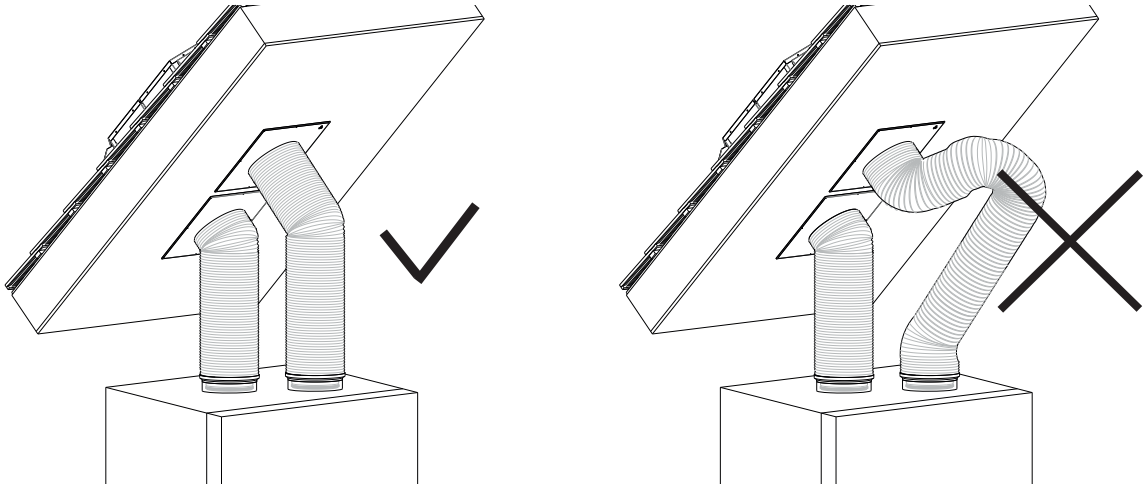

Alignment and bending
Keep the duct as straight as possible. Avoid kinks and make wide bends to reduce air resistance.

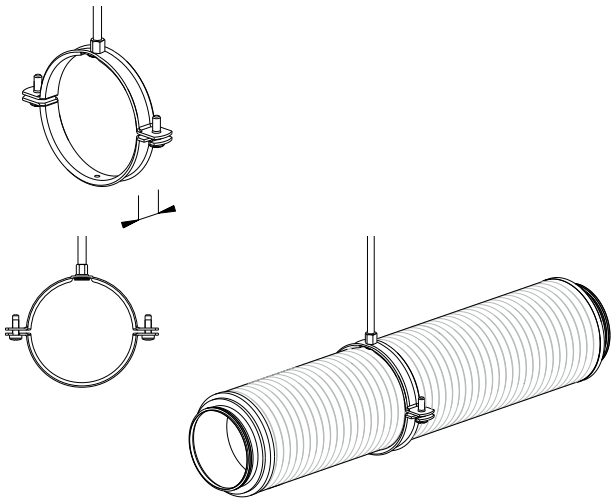

Support the silencers using optional mounting-brackets. Prevent hanging on the connections.

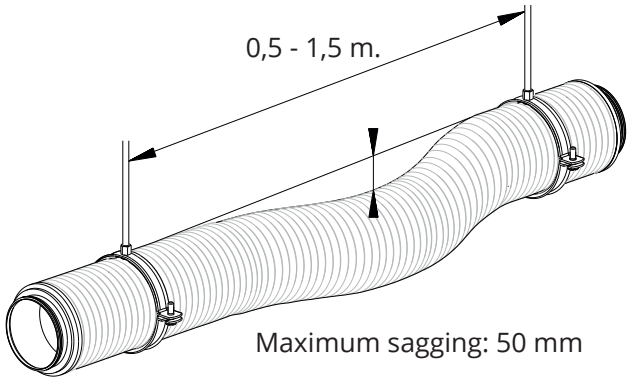

The maximum permissible sagging of the duct between two fixing points must not exceed 50 mm. The distance between two suspension points may vary between 0.5 m and 1.5 m. This distance depends on the type of duct used. For heavier ducts, this distance must be reduced.

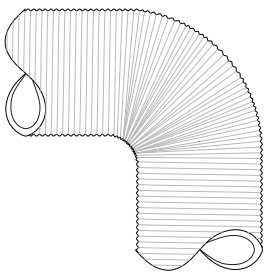

According to NEN-EN 13180, the bending radius of a flexible duct must comply with R = d. However, this minimum bending radius results in high resistance. Always try to minimize bends as much as possible and keep the radius as large as possible. For flexible ducts, a minimum bending radius must always be maintained of R = d + 2 × the insulation thickness.

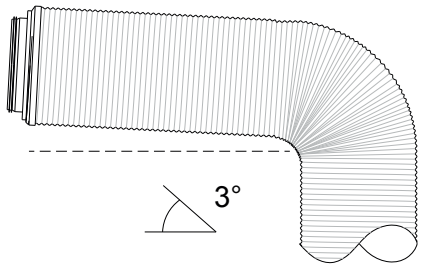

Condensation and direction
Prevent moisture accumulation by avoiding sagging. Apply a slight slope where possible.

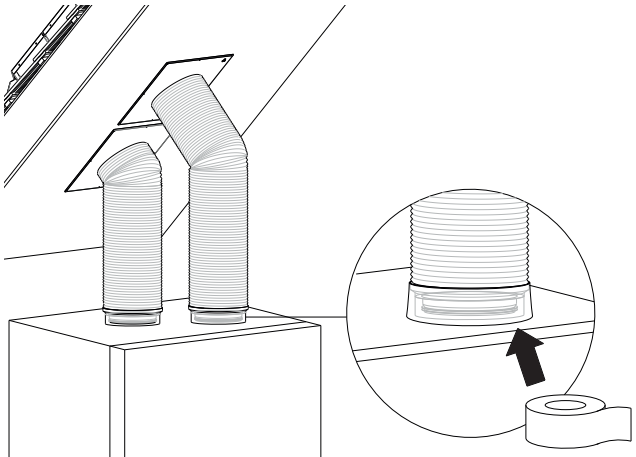

Use aluminium tape in case of high air pressure or a neat finish.

Inspection
Check after installation for air leakage, vibrations and sound reduction.

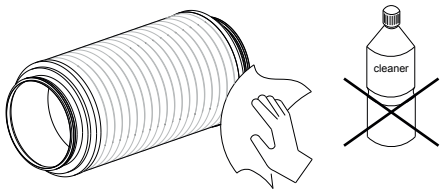

At a minimum, clean it during each annual service, using a duster or low-power vacuum cleaner.

⚠ Do not use cleaning agents.

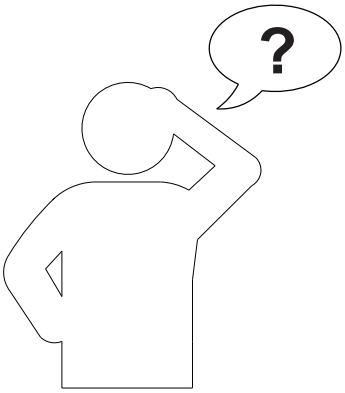

www.burgerhout.com

3 installation

1

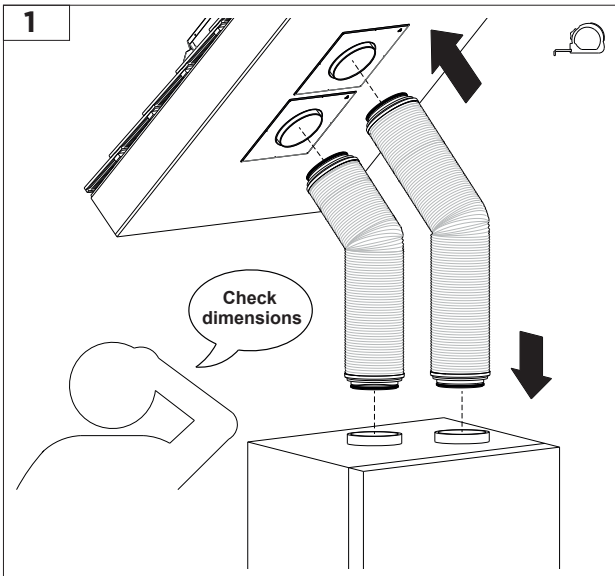

Positioning
Place the silencer between the unit and the air duct (supply or extract). Install it as close as possible to the noise source.

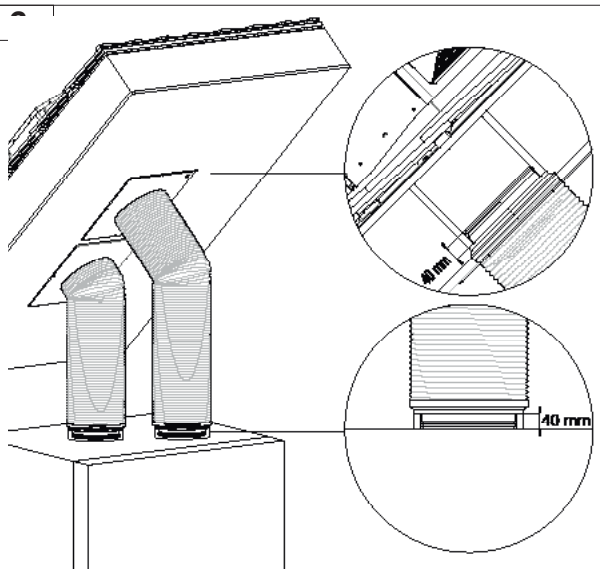

Connecting
The silencer is equipped with two metal connection spigots with lip seals.
Ensure a minimum overlap of 40 mm and press firmly to achieve a proper seal.

- Press firmly so the lip seal closes properly.
- Ensure that the vapour-tight insulation collar connects properly to the unit.

3

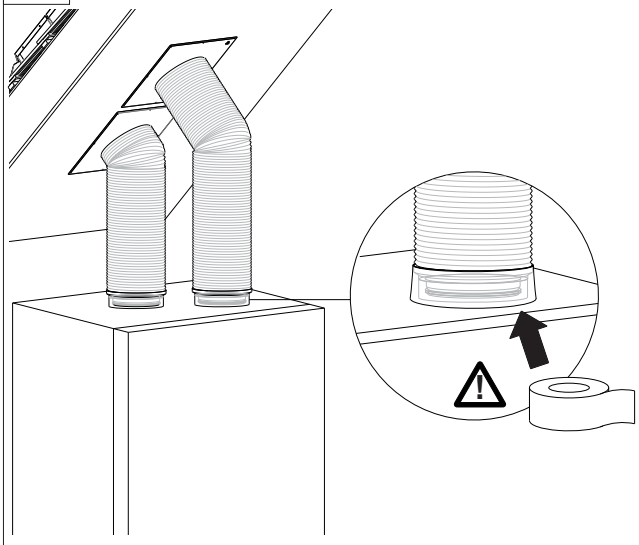

Sealing
If necessary, apply additional sealing with aluminium tape, especially at higher air pressure or for a neat finish.

4 option

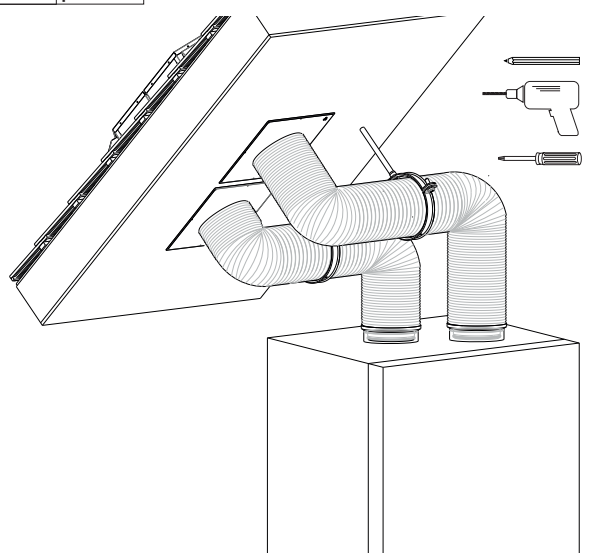

Fixing and support
Support the sillencers using optional brackets
Prevent hanging on the connections.

Burgerhout®
an M&G company

Burgerhout
Burgemeester Grollemanweg 14
9405 TN Assen
The Netherlands
T: +31 592 34 30 43
E: info@burgerhout.nl
www.burgerhout.com

202607